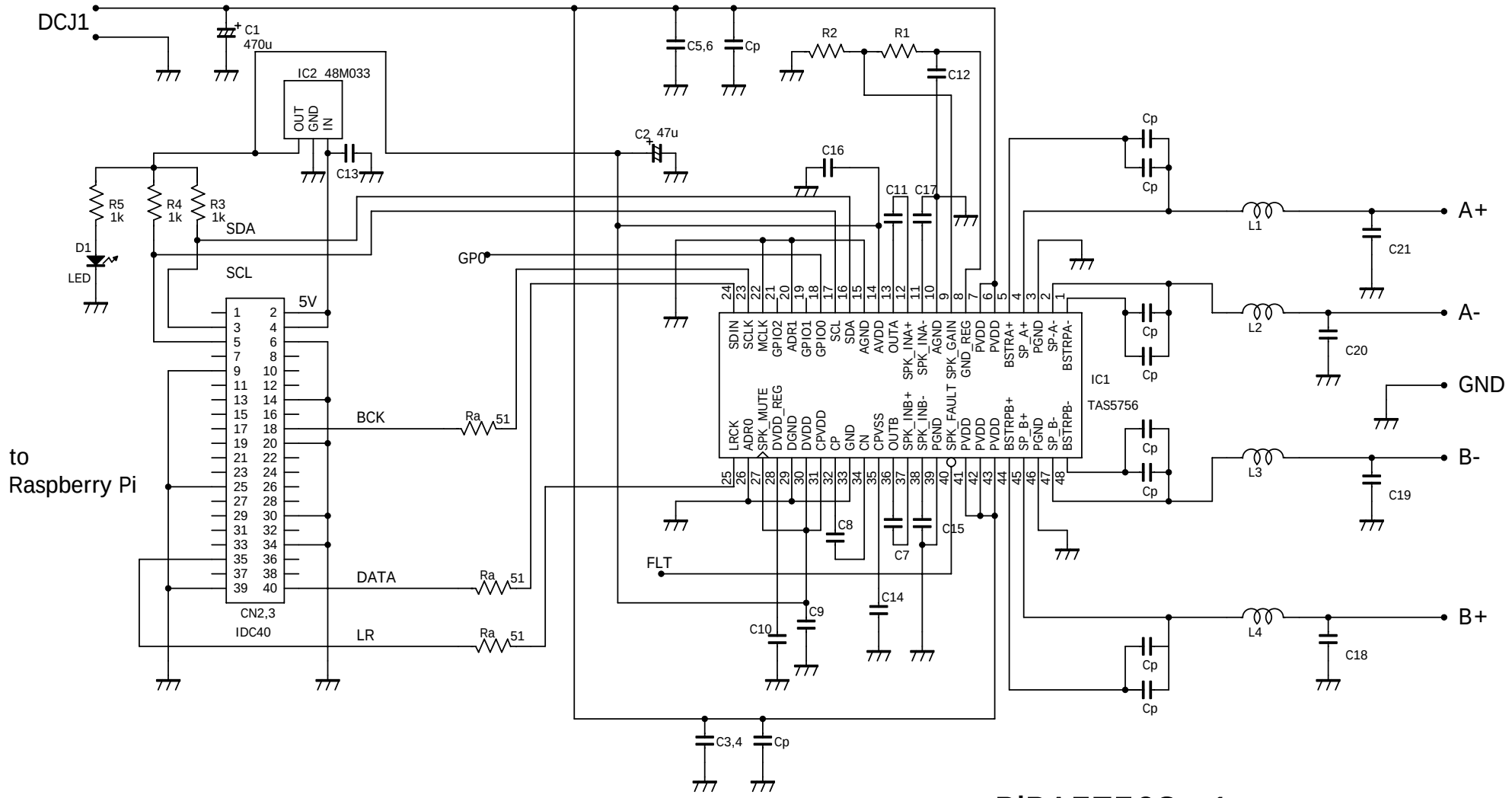

I2C ADRS:0x98(0x4c)

PiPA5756S v1

TAS5756 D-CLASS AMP for Raspberry Pi

(c)OKIRAKU AUDIO 2017-Nov