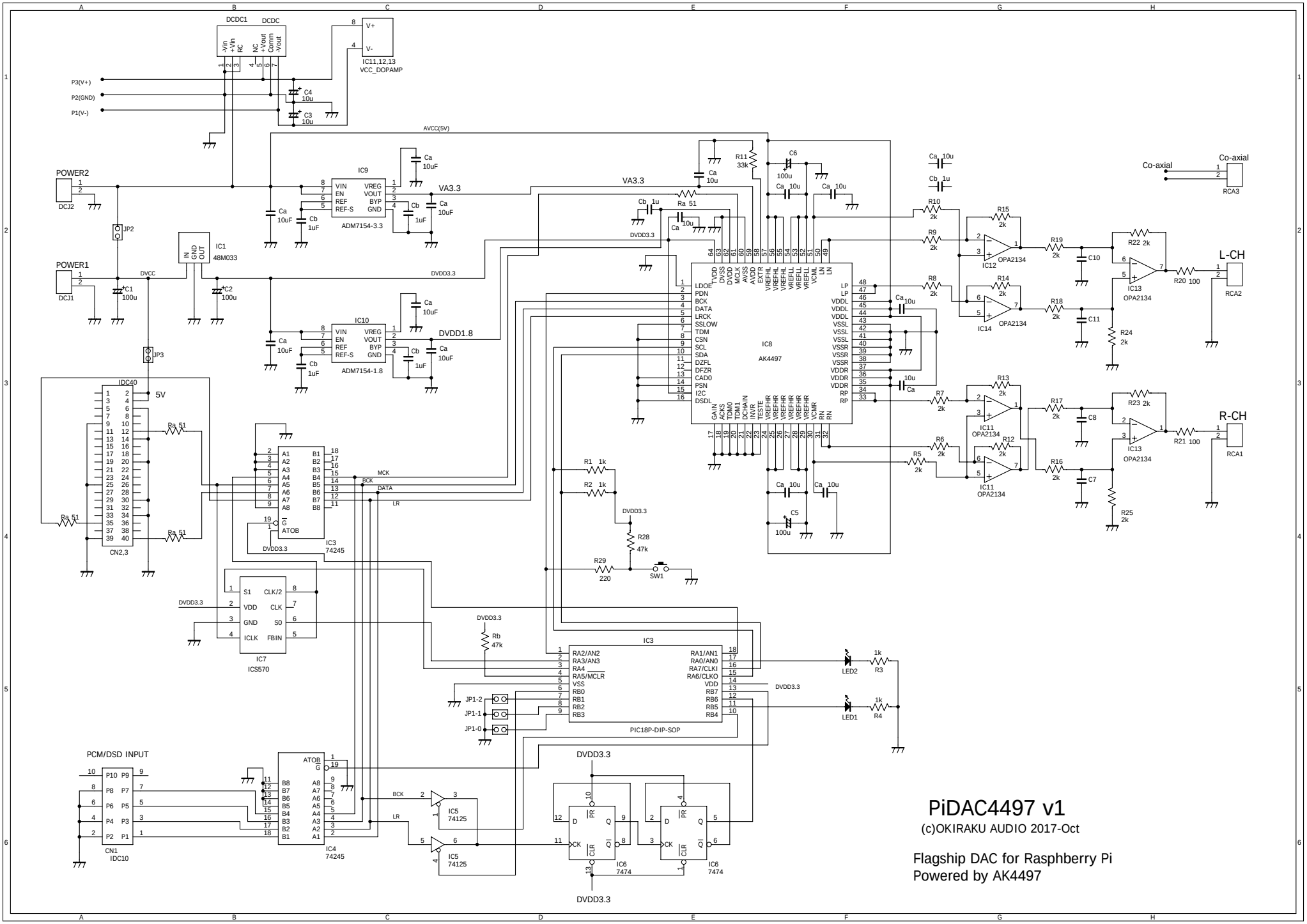

PiDAC4497 v1

(c)OKIRAKU AUDIO 2017-Oct

Flagship DAC for Rasphberry Pi
Powered by AK4497