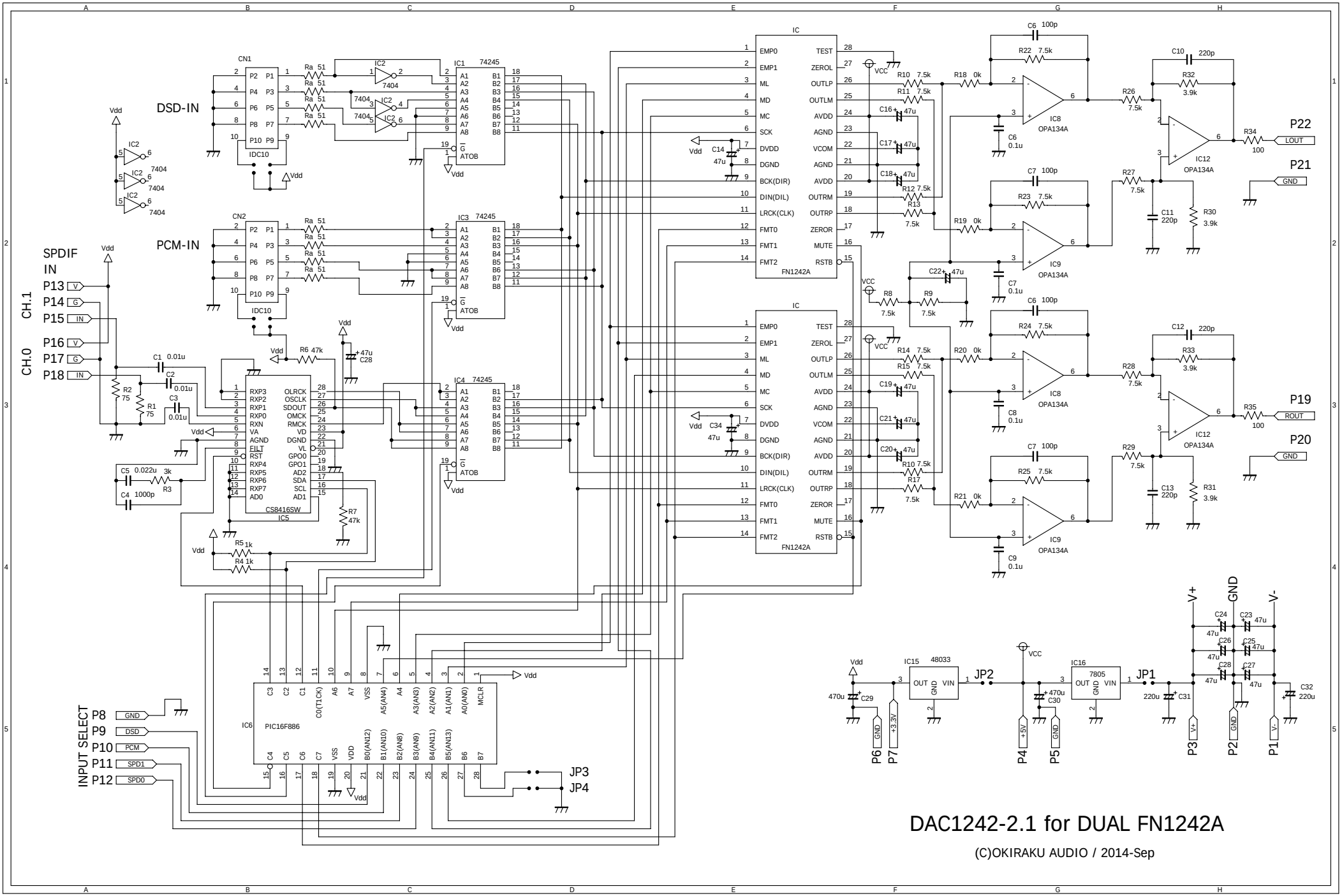
DSD-IN
PCM-IN
SPDIF IN
CH.1
CH.0
INPUT SELECT
P13
P14
P15
P16
P17
P18
P8
P9
P10
P11
P12
P22
P21
P19
P20
P6
P7
P4
P5
P3
P2
P1
JP1
JP2
JP3
JP4
IC1 74245
IC3 74245
IC4 74245
IC5 CS8416SW
IC6 PIC16F886
IC8 OPA134A
IC9 OPA134A
IC12 OPA134A
IC15 48033
IC16 7805
FN1242A
DAC1242-2.1 for DUAL FN1242A
(C)OKIRAKU AUDIO / 2014-Sep