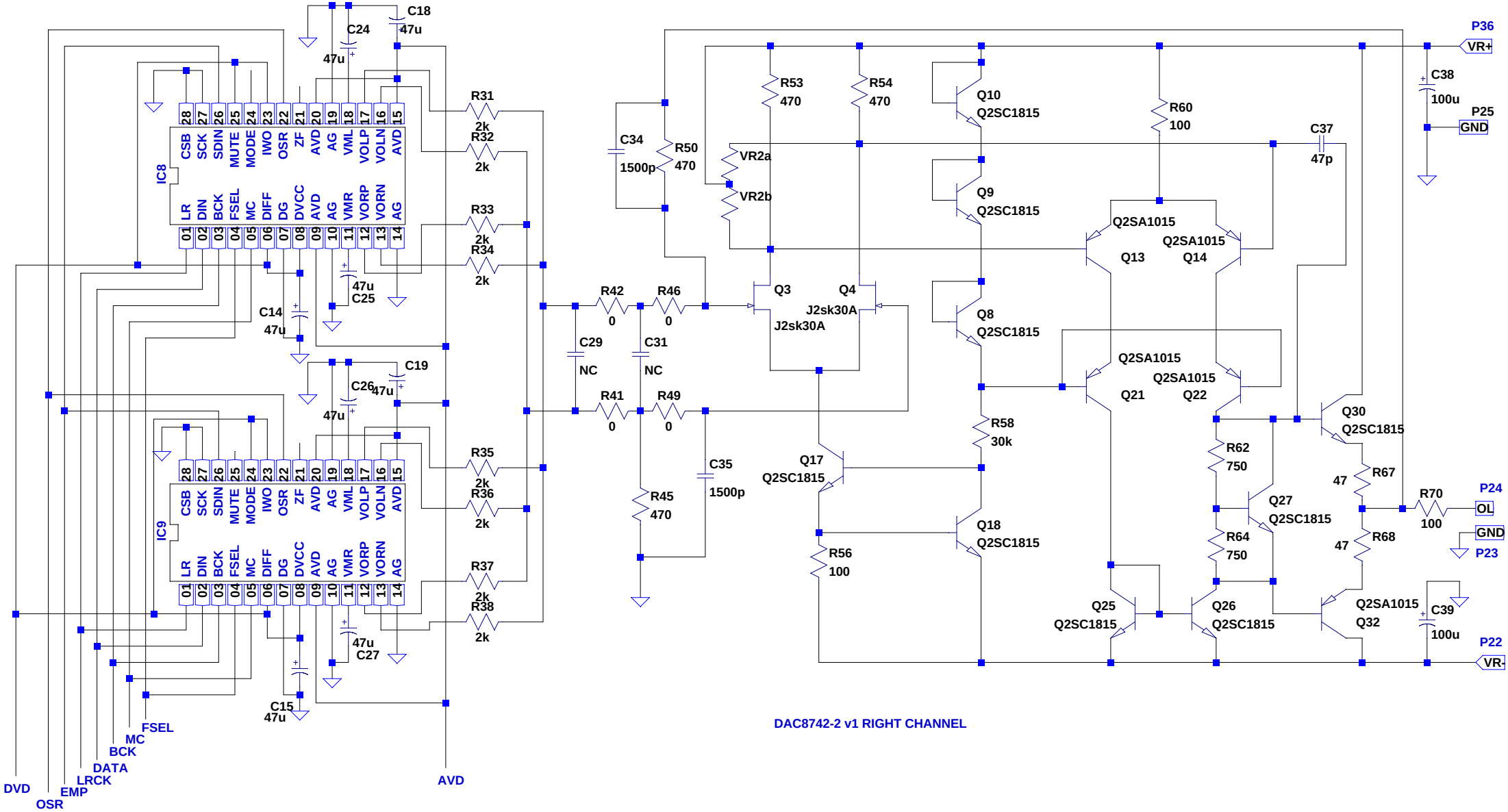

--- J:\DAC?v???W?F?N?g\8741-2-R.asc ---